“Exploring the role of locus of control in linking financial knowledge and attitude to saving behavior of working women in Haryana”

AUTHORS	Kavita Berwal Rohtash Bhall Sonu Dalal Haseen Ahmed

ARTICLE INFO	Kavita Berwal, Rohtash Bhall, Sonu Dalal and Haseen Ahmed (2025). Exploring the role of locus of control in linking financial knowledge and attitude to saving behavior of working women in Haryana. *Investment Management and Financial Innovations*, *22*(3), 414-425. doi:10.21511/imfi.22(3).2025.31
DOI	http://dx.doi.org/10.21511/imfi.22(3).2025.31
RELEASED ON	Wednesday, 17 September 2025
RECEIVED ON	Monday, 03 March 2025
ACCEPTED ON	Monday, 18 August 2025

LICENSE	This work is licensed under a Creative Commons Attribution 4.0 International License

JOURNAL	"Investment Management and Financial Innovations"
ISSN PRINT	1810-4967
ISSN ONLINE	1812-9358
PUBLISHER	LLC “Consulting Publishing Company “Business Perspectives”
FOUNDER	LLC “Consulting Publishing Company “Business Perspectives”

NUMBER OF REFERENCES	NUMBER OF FIGURES	NUMBER OF TABLES
54	2	7

© The author(s) 2025. This publication is an open access article.

BUSINESS PERSPECTIVES

LLC "CPC "Business Perspectives"
Hryhorii Skovoroda lane, 10,
Sumy, 40022, Ukraine

www.businessperspectives.org

Kavita Berwal (India), **Rohtash Bhall** (India), **Sonu Dalal** (India), **Haseen Ahmed** (India)

EXPLORING THE ROLE OF LOCUS OF CONTROL IN LINKING FINANCIAL KNOWLEDGE AND ATTITUDE TO SAVING BEHAVIOR OF WORKING WOMEN IN HARYANA

Abstract

In today's dynamic financial environment, understanding the psychological and cognitive factors that shape saving behavior is important for strengthening financial stability and well-being. This study examines the influence of financial knowledge and financial attitude on the saving behavior of working women in Haryana (India). Furthermore, the study also examines the mediating role of the internal locus of control in these relationships. A primary survey is conducted between December 2023 and April 2025, using a self-administered questionnaire. Data are collected from 225 working women through a non-probability sampling method and analyzed using Smart PLS version 4.0. The findings indicate that financial knowledge and financial attitude significantly and positively affect internal locus of control and saving behavior, respectively. Working women with a positive financial mindset and greater financial understanding believe in their ability to manage financial outcomes and engage in consistent saving practices. Internal locus of control also positively influences saving behavior and serves as a significant mediator in the relationships between financial knowledge and saving behavior, and between financial attitude and saving behavior. Notably, the mediation of the internal locus of control between financial attitude and saving behavior shows a stronger influence than its mediation between financial knowledge and saving behavior.

Keywords financial literacy, women, attitude, decision making, mediation effect, behavior, financial planning, personal finance

JEL Classification D14, G41, G53

Type of the article: Research Article

Received on: 3rd of March, 2025
Accepted on: 18th of August, 2025
Published on: 17th of September, 2025

© Kavita Berwal, Rohtash Bhall, Sonu Dalal, Haseen Ahmed, 2025

Kavita Berwal, Assistant Professor, New Delhi Institute of Management, India. (Corresponding author)

Rohtash Bhall, Assistant Professor, PIMR, Parul University, India.

Sonu Dalal, Assistant Professor, PIMR, Parul University, India.

Haseen Ahmed, Assistant Professor, New Delhi Institute of Management, India.

This is an Open Access article, distributed under the terms of the Creative Commons Attribution 4.0 International license, which permits unrestricted re-use, distribution, and reproduction in any medium, provided the original work is properly cited.

Conflict of interest statement:
Author(s) reported no conflict of interest

INTRODUCTION

Globalization and market liberalization have profoundly driven individuals to adopt effective financial management strategies. The rising complexity of global financial systems and the growing availability of diverse financial services suggest that today's society must assume greater responsibility for managing its borrowing, saving, and investing practices to ensure personal stability and security (Lusardi & Mitchell, 2014; Sevim et al., 2012). Individual savings decisions are crucial because they help manage finances during times of uncertainty and thus contribute to their long-term stability. Accumulating personal savings has become increasingly crucial for individuals and households in an era of changing population demographics and pension reforms, leading to significant changes in the global financial landscape (van Schie et al., 2012; Van Rooij et al., 2012). Global population aging created a need for financial planning. Life expectancy has risen due to improved medical facilities, which in turn have led to increased financial pressures. This demographic transition brought

http://dx.doi.org/10.21511/imfi.22(3).2025.31

up the need for adequate financial savings. Understanding the psychological and cognitive factors that influence saving behavior offers valuable opportunities to enhance financial outcomes and promote better financial well-being.

Existing literature highlights that saving behavior is not merely a function of income, but is significantly shaped by individual-level factors like financial attitude and financial knowledge. Financial knowledge enables individuals to understand concepts such as budgeting, inflation, interest, etc., which empower them to make optimal financial decisions. Financial knowledge and effective financial behavior are essential for addressing challenges such as increasing living costs, debt control, and accumulating long-term wealth, particularly during retirement planning to ensure future well-being (Lusardi & Mitchell, 2017). However, those who lack financial knowledge may find it difficult to manage their finances, which often leads to poor decision-making and ultimately compromises their long-term financial security (Lutfi, 2022). Meanwhile, financial attitude reflects one's mindset, values, and emotions toward money, which deeply influence day-to-day financial choices. However, the association between financial attitude, financial knowledge, and saving behavior is not merely direct rather it is often mediated by various psychological factors. Locus of control is one such psychological concept that has originated from social learning theory. It measures the degree to which one believes they have control over the outcomes. Individuals who believe in a direct connection between effort and outcomes tend to remain focused on long-term financial goals. This belief system plays a mediating role in determining how knowledge and attitude are internalized and expressed through behavior.

1. LITERATURE REVIEW

Financial attitude refers to the thoughts, views, and perspectives individuals hold regarding money management. A positive financial attitude impacts how people perceive and handle money, and this, in turn, affects the person's behavior regarding various aspects of finances, including management, budgeting, and decision-making. Financial transparency, thoughtful spending habits, proactive management of finances, and thinking ahead for future financial needs define a positive attitude of an individual. All these factors contribute to a positive financial attitude that fosters saving and are responsible for the best financial practices (Widjaja et al., 2020). Evidence from the literature supports the notion that saving, budgeting, and being economical are among the most significant indicators of financial attitude (Gahagho et al., 2021; Hilgert et al., 2003). A positive financial attitude is associated with more savings (Anastasya & Pamungkas, 2023; Charista et al., 2022; Alodya & Isnurhadi, 2021).

Financial knowledge refers to an individual's understanding of various financial concepts and terms encountered in their daily financial activities (Lusardi, 2019). Research has demonstrated a strong association between financial literacy and financial behavior (Lusardi & Mitchell, 2014; Hilgert et al., 2003). According to Hilgert et al. (2003), financial literacy is responsible for adopting best financial practices, such as maintaining an emergency fund and a savings account. Individuals better manage finances when they regularly check financial statements, care regarding the accuracy of transactions, prepare plans for after retirement, and choose financial assets effectively (Magendans, 2014). According to Braunstein and Welch (2002), a lower level of financial literacy can hinder long-term saving habits. Essentially, those who possess financial literacy can budget their money, maintain an emergency fund, save consistently, and plan for retirement (Asaff et al., 2019; Henager & Mauldin, 2015; Mahdzan & Tabiani, 2013).

Locus of control is the perception of an individual regarding the reasons behind the things that occur to them, including accomplishments, successes, failures, and other things (Arkorful & Hilton, 2022; Bapat, 2020). A person's locus of control determines their perceptions of their ability to influence life events (Pradiningtyas & Lukiastuti, 2019). People with positive financial attitudes tend to have a strong locus of control, which helps them to self-regulate and engage in financially beneficial activities (Dwiastanti, 2017). The stronger an

individual's financial attitude, the greater their locus of control will be. Conversely, a weaker financial attitude corresponds to a lower locus of control (Manihuruk & Lubis, 2021; Bénabou & Tirole, 2016). Further, financial knowledge positively influences locus of control. With a higher level of financial knowledge, individuals believe that they can solve their financial issues (Budiono, 2020; Pradiningtyas & Lukiastuti, 2019). The financial knowledge of individuals in terms of the value of investments, budgeting, and insurance can boost their self-confidence in the outcomes they achieve. Additionally, they can control their finances better and make proper decisions based on their level of financial knowledge and self-discipline (Haudi, 2023; Chujan et al., 2022).

Tagini et al. (2021) also state that it is one of the several factors influencing the psychology of people. This is associated with prospect theory, which suggests a significant influence of psychological factors in the financial decisions of people facing a variety of choices. The belief of individuals in their own abilities will make them more cautious while spending and setting up an emergency fund (Ardyansyah & Indrawati, 2024). A study by Abay et al. (2016) provided a behavioral explanation for enhancing saving rates in developing countries. The study explains that individuals with an internal LOC tend to save more, as they tend to exhibit lower levels of hyperbolic discounting. Further, Bucciol and Trucchi (2021), Cobb-Clark et al. (2016), and Kimball and Shumway (2009) revealed that individuals with an external locus of control were significantly less likely to save for retirement than those with an internal LOC.

As per the Theory of Planned Behavior (TPB), financial attitude influences behavior indirectly through intention. A positive attitude toward saving or budgeting strengthens the intention to act, but actual behavior also depends on one's belief in their ability to perform the behavior (perceived control). Further, Agustina and Mardiana (2020) report that if a person has a positive financial attitude in terms of, for example, intention to save, he or she is likely to save regularly because he/she believes that he/she can control financial decisions. Thus, it points out that having an internal locus of control strengthens the link between financial attitudes and saving behavior, thereby making individuals more confident and proactive in financial management. Likewise, Gautama and Deyola (2014) highlighted that financial attitudes do not influence saving decisions directly, although attitudes can result in behavior indirectly through other variables such as intention.

A more comprehensive understanding of basic financial concepts will improve the ability of individuals to manage money effectively. This impact will be limited without a strong personal belief. A belief in personal control over one's destiny can enhance the effective use of financial knowledge to adopt positive financial behavior (Perry & Morris, 2005). An earlier study by Kholilah and Iramani (2013) also suggests that individuals with strong financial knowledge can develop better self-control, which, in turn, fosters responsible financial behavior. Further, Agustina and Mardiana (2020) reported that people with higher financial knowledge can save better; their saving ability is enhanced further when they feel they can control their finances.

This study investigates the influence of financial attitude and financial knowledge on the saving behavior of working women in Haryana, India. The role of the internal locus of control as a mediator in these relationships is also examined. Figure 1 illustrates the hypothesized model.

Based on the above literature, the proposed hypotheses are:

H_{1a}: *Financial attitude has a positive impact on the internal locus of control.*

H_{1b}: *Financial attitude has a positive impact on saving behavior.*

H_{2a}: *Financial knowledge has a positive impact on the internal locus of control.*

H_{2b}: *Financial knowledge has a positive impact on saving behavior.*

H_{3}: *Internal locus of control has a positive impact on saving behavior.*

H_{4a}: *Internal locus of control mediates the relationship between financial attitude and saving behavior.*

http://dx.doi.org/10.21511/imfi.22(3).2025.31

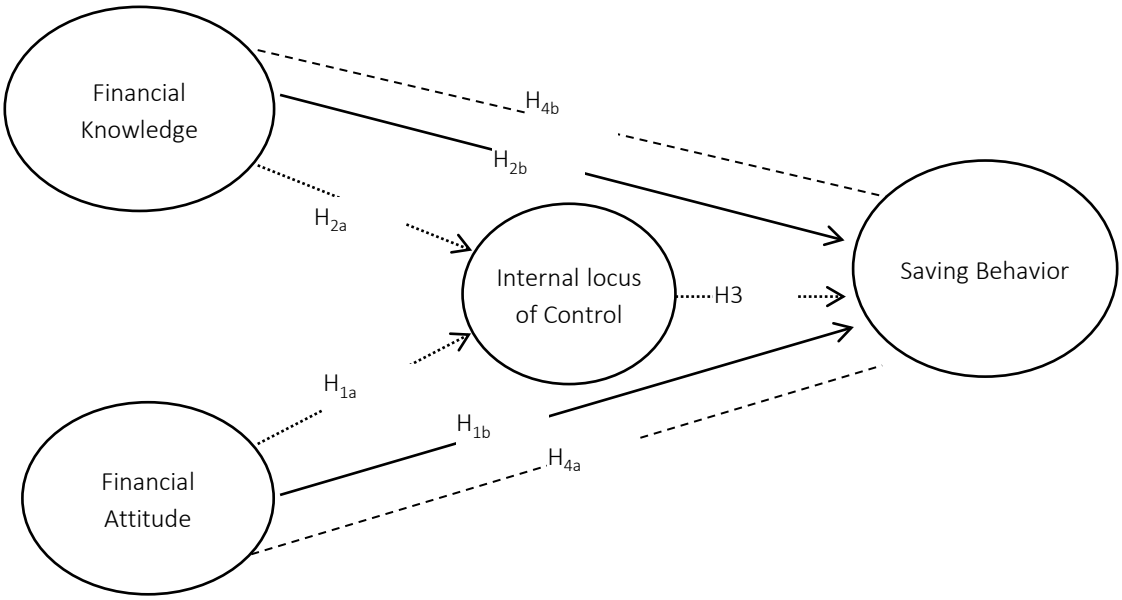

Note: The dotted path indicates the indirect effect.

Figure 1. Hypothesized model

H_{4b}: *Internal locus of control mediates the relationship between financial knowledge and saving behavior*

2. METHODS

A primary survey was conducted between December 2023 and April 2025, through a self-administered questionnaire adopted and modified to fit the purpose of the study. The sample includes 225 working women from Haryana, India. Data were collected through physical and online modes using a purposive sampling method. The questionnaire includes a demographic profile of the respondents and questions related to financial attitude, financial knowledge, locus of control, and saving behavior. Table 1 outlines constructs, the number of items, and the source of each construct. The minimum required sample size was determined by G-power software. This sample size (N=119) was obtained by setting the effect size (f^2) as 0.15, the power as 0.95, and the chance of type-I (α) error as 0.05.

The analysis was undertaken through Smart PLS (version 4.0) software. This software is used for the execution of Partial Least Squares Structural Equation Model (PLS-SEM). It is frequently used in management disciplines because of its strong analytical skills (Hair et al., 2019). It optimizes explained variance effectively by analyzing complex latent variable relationships, well-suited to the aim of this study (Hair et al., 2024).

Table 1. Construct description

Constructs	Number of items	Source
Financial Attitude	5	(Potrich et al., 2018)
Financial Knowledge	4	(Bhargava et al., 2022)
Locus of Control	3	(Kesavayuth et al., 2018)
Saving Behavior	4	(Chia et al., 2011)

The demographic overview of 225 working women is shown in Table 2. It highlights several main features like age, residential area, marital status, education, occupation, and monthly income. The sample includes a significant portion of young women. 48% of them are below the age of 35 years, and 70.7% possess post-graduate and above education, which indicates a highly educated segment of women. Further, 69.3% of respondents reside in urban areas. Marital status reveals that 59.6% of respondents are married, while 40.4% are single, divorced, or separated, thereby reflecting a diverse family structure. In terms of occupation, 56.4% of the total respondents work in the private sector, which is followed by 23.6% in government jobs, and a small percentage (4.4%) were self-employed. Furthermore, 36.9% of respondents earn up to Rs.

25,000 per month, 45.8% earn between Rs. 25,000 and Rs. 50,000 per month, and 17.3% earn Rs. 50,000 and above per month. Overall, this demographic profile points to a young, educated, and economically modest population.

Table 2. Demographic profile

Variables	Category	Frequency	Percentage
Age	Below 35	108	48
	35-50	72	32
	Above 50	45	20
	Total	225	100
Education	Up to 12th	19	8.4
	Graduate	47	20.9
	Post-graduation and above	159	70.7
	Total	225	100
Residential area	Rural	69	30.7
	Urban	156	69.3
	Total	225	100
Marital status	Single/Divorce/ Separated	91	40.4
	Married	134	59.6
	Total	225	100
Occupation	Private	127	56.4
	Government	53	23.6
	Semi-government	35	15.6
	Self-employed	10	4.4
	Total	225	100
Monthly income	Up to Rs. 25,000	83	36.9
	Rs. 25,000 – Rs. 50,000	103	45.8
	Rs. 50,000 and above	39	17.3
	Total	225	100

3. RESULTS

The measurement model analysis is used to examine the relationship between each set of indicators and their corresponding latent variables. It also serves to assess the construct validity and reliability of the measurement instrument (Hair, 2006). The results are shown in Table 3. The item loading ranges from 0.810 to 0.912, and all exceed the acceptable limit of 0.70 (Vinzi et al., 2010). Cronbach's alpha and Composite Reliability values above 0.70 for each construct confirmed reliability (Hair et al., 2016). Furthermore, the Average Variance Extracted (AVE) value confirmed convergent validity. A model is considered fit if the AVE for each construct is higher than 0.50 (Hair et al., 2016) and the results meet this criterion. Therefore, all the 16 items were retained for further analysis. Further, the multicollinearity among the items was examined through the Variance Inflation Factor (VIF). All VIF values of the indicators were less than 5, thereby indicating acceptable levels of multicollinearity (Hair et al., 2016).

Moreover, the Fornell-Larcker criterion and the Heterotrait-Monotrait (HTMT) ratio assess discriminant validity (Henseler et al., 2015). The Fornell-Larcker criterion states that √AVE (diagonal items in bold and italics) for each construct should be more than its correlations with the other constructs (below the diagonal items), and the results were found satisfactory (Table 4). Moreover,

Table 3. Item loadings, validity, and reliability

Constructs	Statements/ Items	Item loadings	VIF	Cronbach's alpha	Composite Reliability	AVE
Financial Knowledge (FK)	FK1	0.884	2.737	0.906	0.912	0.781
	FK2	0.906	3.227			
	FK3	0.847	2.273			
	FK4	0.896	2.701			
Financial Attitude (FA)	FA1	0.877	2.840	0.932	0.935	0.787
	FA2	0.905	3.955			
	FA3	0.904	3.981			
	FA4	0.893	3.793			
	FA5	0.854	2.932			
Locus of Control (LOC)	LOC1	0.887	2.354	0.839	0.847	0.758
	LOC2	0.912	2.615			
	LOC3	0.810	1.638			
Saving Behavior (SIB)	SIB1	0.834	2.212	0.881	0.882	0.737
	SIB2	0.863	2.518			
	SIB3	0.871	3.456			
	SIB4	0.867	3.382			

http://dx.doi.org/10.21511/imfi.22(3).2025.31

all HTMT values (above the diagonal items) were less than the limit of 0.85, indicating significant evidence for discriminant validity.

Table 4. Discriminant validity

Constructs	FA	FK	LOC	SIB
FA	0.887	0.444	0.625	0.758
FK	0.410	0.884	0.527	0.489
LOC	0.555	0.464	0.871	0.705
SIB	0.690	0.443	0.608	0.859

Note: FK = Financial Knowledge, SIB = Saving Behavior, FA = Financial Attitude, LOC = Locus of Control.

The structural model represented the hypothesized path in the research design (Figure 1). Its assessment is carried out based on R^2 (Coefficient of Determination), Q^2 (Predictive Relevance), and the statistical significance of the path coefficients. As per Falk and Miller (1992), the quality of the model is assessed by the strength of each structural path, as indicated by the R^2 value of the endogenous variable. R^2 value should be equal to or over 0.1, and results indicate that all R^2 values exceed this threshold, confirming the model's predictive capability (Table 5). The Q^2 value above zero shows the predictive relevance of the model and was found significant. Finally, model fit was assessed by Standardized Root Mean Square Residual (SRMR) and was found to be 0.057, which was lower than the required threshold limit of .10, signifying an acceptable model fit as per Hair et al. (2016).

Table 5. Saturated model result

Construct	R^2	Q^2	SRMR
LOC	0.375	0.355	0.057
SIB	0.559	0.495	

Note: LOC = Locus of Control, SIB = Saving Behavior.

Further, hypothesis testing was conducted using the bootstrap method at a significance level of $p < 0.05$. The relationship between exogenous and endogenous constructs was evaluated using path coefficients (β) and t-statistics (Table 6).

Hypothesis H_{1a} proposed a positive relationship between financial attitude and internal locus of control. The analysis confirmed this with a $\beta = 0.438$, $t = 6.399$, and $p = 0.000$, with a confidence interval between 0.292 and 0.562, further supporting the robustness of this finding. This indicates that working women with a more positive financial attitude tend to have a stronger internal locus of control.

Hypothesis H_{1b} examined the effect of financial attitude on saving behavior. The results revealed an even stronger relationship with $\beta = 0.486$, $t = 6.778$, and $p = 0.000$, with a confidence interval between 0.342 and 0.622, thereby supporting H_{1b}. This suggests that working women with a positive financial attitude actively engage in saving practices.

Hypothesis H_{2a} explored the influence of financial knowledge on the internal locus of control. This relationship was also supported, with $\beta = 0.284$, $t = 4.605$, and $p = 0.000$ with a confidence interval extending from 0.161 to 0.401. This demonstrates a significant and positive direct relationship between financial knowledge and internal locus of control of working women. This means that women who possess more financial knowledge tend to have a higher internal locus of control.

Hypothesis H_{2b} assessed the relationship between financial knowledge and saving behavior. The results indicated a statistically significant positive relationship, with a $\beta = 0.110$, $t = 2.409$, and $p = 0.016$, thereby supporting H_{2b}. However, the effect size was relatively small, especially when compared to the effect of financial attitude on the same outcome, with a confidence interval of 0.019 to 0.196. This suggests that working women who possess higher financial knowledge tend to save more.

Hypothesis H_3 examined the effect of the internal locus of control on saving and investment behavior**.** The findings provided strong support for this hypothesis, revealing a positive and statistically significant relationship with $\beta = 0.288$, $t = 4.165$, and $p = 0.000$, with a confidence interval of 0.156 to 0.425. This indicates that a strong internal locus of control leads to positive saving behavior.

A mediation analysis was undertaken to examine the role of internal Locus of Control (LOC) as a mediator in the relationships between Financial Attitude (FA) and Saving Behavior (SIB) and between Financial Knowledge (FK) and Saving Behavior (SIB). The results are shown in Table 7.

The total effect of financial attitude on saving behavior was found to be $\beta = 0.612$, $t = 11.293$, and p

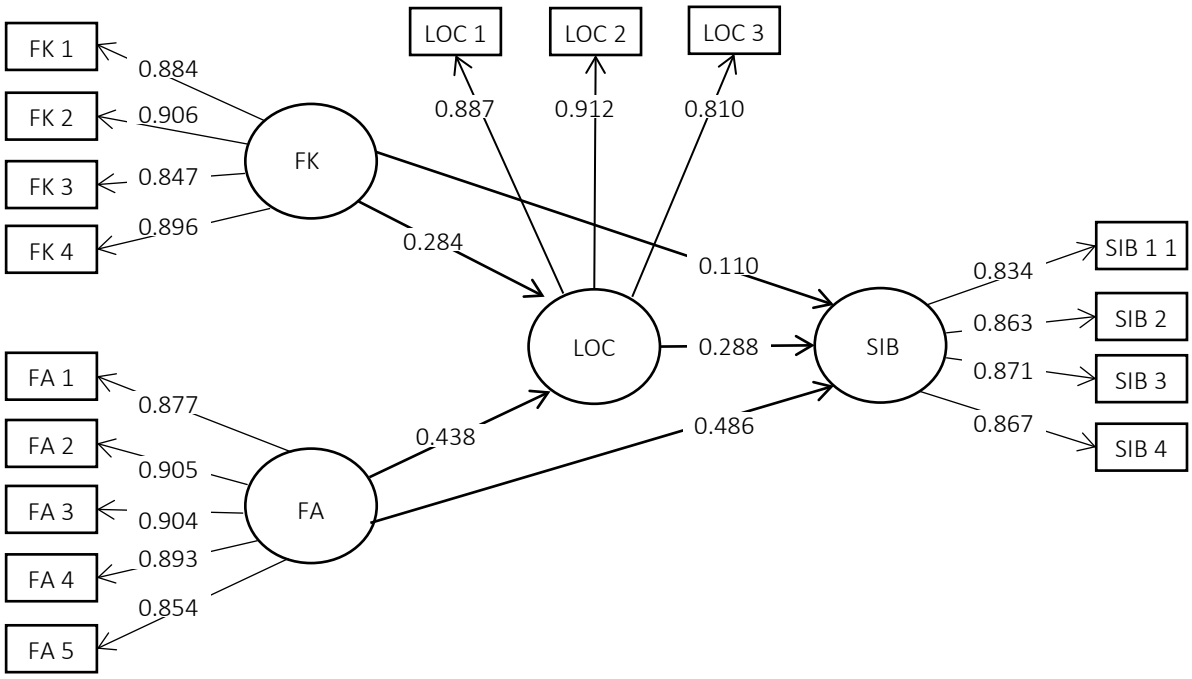

Note: FK = Financial Knowledge, SIB = Saving Behavior, FA = Financial Attitude, LOC = Locus of Control.

Figure 2. PLS-SEM path analysis model

Table 6. Direct relationships

Hypothesis	Relationship	Beta Coeff. (β)	S.E	t-value	p-value	Confidence Interval		Decision
						2.5%	97.50%	
H1a	FA → LOC	0.438	0.069	6.399	0.000	0.292	0.562	Supported
H1b	FA → SIB	0.486	0.072	6.778	0.000	0.342	0.622	Supported
H2a	FK → LOC	0.284	0.062	4.605	0.000	0.161	0.401	Supported
H2b	FK → SIB	0.110	0.045	2.409	0.016	0.019	0.196	Supported
H3	LOC → SIB	0.288	0.069	4.165	0.000	0.156	0.425	Supported

Note: S.E. = Standard Error, FK = Financial Knowledge, SIB = Saving Behavior, FA = Financial Attitude, LOC = Locus of Control.

< 0.001, indicating significant influence. This relationship remained significant with the inclusion of LOC as a mediator with β = 0.486, t = 6.778, and p < 0.001. Additionally, Hypothesis H_{4a} tested the indirect effect of financial attitude on saving behavior through internal locus of control. The results of mediation analysis indicated a significant indirect effect with β = 0.126, t = 3.289, and p = 0.001. The confidence interval, extending from 0.061 to 0.210, confirms the significance of the mediated pathway.

The total effect of financial knowledge on saving behavior was β = 0.191, t = 3.673, and p < 0.001, indicating a modest but statistically significant relationship. This relationship remained significant with the inclusion of LOC as a mediator with β = 0.110, with t = 2.409 and p < 0.001. Hypothesis H_{4b} explored the indirect effect of FK on SIB through LOC. The results showed a significant indirect effect with β = 0.082, t = 2.927, and p = 0.003. The confidence interval extending from 0.037 to 0.146 further confirms the significance of the mediation effect.

This indicates a partial mediating role of LOC in the relationships between FA, FK, and SIB. Hence, both H_{4a} and H_{4b} were supported. Figure 2 explains the standardized estimate for the structural model, showing the factor loading for each item and the mediating effect of LOC.

http://dx.doi.org/10.21511/imfi.22(3).2025.31

Table 7. Mediation analysis results

Total Effect				Direct effect			Indirect effect							
Hypothesis	Beta Coeff. (β)	t-value	Sig.	Beta coeff. (β)	t-value	Sig.	Hypothesis	Beta Coeff. (β)	S.E	t-value	Sig.	Confidence Interval		
												2.5%	97.50%	
FA → SIB	0.612	11.293	0.000	0.486	6.778	0.000	H4a: FA → LOC →SIB	0.126	0.038	3.289	0.001	0.061	0.210	
FK → SIB	0.191	3.673	0.000	0.110	2.409	0.000	H4b: FK → LOC →SIB	0.082	0.028	2.927	0.003	0.037	0.146	

Note: S.E. = Standard Error, S.D. = Standard deviation, FK = Financial Knowledge, SIB = Saving behavior, FA = Financial Attitude, LOC = Locus of Control.

4. DISCUSSION

Various studies have examined the association between financial literacy and financial behavior (Maheshwari et al., 2025; Prayuda & Purwanto, 2024), but they often lack a detailed examination of the foundational components of these constructs. The study adds to the existing literature by addressing this gap, specifically focused on empirically testing the relationship of financial attitude and financial knowledge with saving behavior and the mediating effect of internal locus of control in these relationships.

The study examined the relationship between financial attitude, internal locus of control, and saving behavior. The findings highlighted a significant and positive effect of financial attitude on internal locus of control and saving behavior, which confirms H_{1a} and $H_{1b,}$ respectively. This implies that working women with a positive financial attitude tend to have a strong internal locus of control. Additionally, women who are optimistic and proactive believe they can influence their financial outcomes, which supports earlier findings (Manihuruk & Lubis, 2021). Based on the results, the positive effect of financial attitude on saving behavior indicates that working women who value financial planning and possess a positive attitude towards money are future-oriented and save more. As per Ameliawati and Setiyani (2018), the attitude of an individual will have an impact on how they handle their money and how much they spend. Widjaja et al. (2020) and Dwiastanti (2017) also reported that a positive viewpoint of individuals regarding financial management are more inclined to adopt saving as a regular habit.

The results highlight the direct, significant, and positive effect of internal locus of control on saving behavior, which supports H_3. Based on this, it can be stated that working women with a strong internal locus of control are more inclined to save. Supporting this, Bucciol and Trucchi (2021), Tagini et al. (2021), Strömbäck et al. (2017), and Cobb-Clark et al. (2016) found that individuals with a strong internal locus of control were more confident in controlling their financial future and more likely to indulge in saving activities.

Additionally, this study undertook an in-depth empirical investigation by highlighting the significant and positive mediating role of internal locus of control in the relationship between financial attitude and saving behavior, which confirms H_{4a}. Positive financial attitude among working women leads to more savings if they believe they can control their financial outcomes, supported by the theory of planned behavior, which highlights that attitude influences behavior indirectly (Ajzen, 2002). Evidence from the literature also supports that the internal locus of control plays a significant role in strengthening the relationship between financial attitudes and saving behavior (Agustina & Mardiana, 2020; Gautama & Deyola, 2014).

Additionally, the study investigated the relationship between financial knowledge, internal locus of control, and saving behavior. The findings highlighted a positive and significant effect of financial knowledge on internal locus of control and saving behavior, respectively. So, H_{2a} and H_{2b} are accepted. A higher level of financial knowledge possessed by women makes them feel more confident and believe in their abilities in managing their financial outcomes. Supporting this, Sabri and MacDonald (2010) and Perry and Morris (2005) also stated that financial literacy strengthens individuals' belief in their ability to control financial outcomes.

A positive relationship between financial knowledge and saving behavior indicates that working women with higher financial knowledge tend to save for future needs. It can be stated that understanding basic financial concepts, such as numeracy, interest rates, inflation, etc., develops their skills and confidence needed to prioritize saving. Lusardi and Mitchell (2014) also supported the finding by reporting the significant role of financial literacy in encouraging saving practices among individuals.

The results confirmed that the internal locus of control plays a significant role as a mediator in the relationship between financial knowledge and saving behavior, which confirms H_{4b}. This indicates the indirect influence of financial knowledge on saving behavior, thereby strengthening the belief of working women in their ability to control the outcomes of their finances. Adding on, improving financial knowledge and internal locus of control can foster prudent saving behavior. Studies by Agustina and Mardiana (2020) support the findings and state that with an internal locus of control, individuals can well utilize their financial knowledge to take the best financial practices like saving, budgeting, and effective money management.

Thus, the study clarifies the intricate relationship between financial attitude, financial knowledge, and internal locus of control in shaping saving behavior. This underscores the importance of psychological factors in governing the saving behavior of working women. These results emphasize the need for various financial education programs, especially focused on the women's segment. Such programs can improve their knowledge about finances, promote positive financial attitudes, and provide them with greater control over their financial decisions. This will help women improve their savings and financial security.

CONCLUSION

The study aimed to explore the direct effect of financial attitude and financial knowledge on the saving behavior of working women in Haryana, India. It also conducted an in-depth analysis of the mediating role of internal locus of control in the relationship between financial attitude and saving behavior, and between financial knowledge and saving behavior. The study revealed that both financial attitude and financial knowledge significantly affect the saving behavior of working women. The direct effects of these variables indicate that understanding financial concepts and holding a positive financial mindset play a crucial role in governing prudent saving behavior. As a mediator, internal locus of control significantly and positively influences the relationship between both financial attitude and financial knowledge with saving behavior. Thus, emphasizing the significance of personal agency and one's belief in controlling financial outcomes. The significance of indirect and direct effects explains the dynamic aspect of saving behavior. This suggests that enhancing financial knowledge and fostering a positive financial attitude can lead to better saving decisions. Moreover, reinforcing a strong internal locus of control might make individuals actively manage their savings.

The findings have important practical implications for both practitioners and policymakers. The results highlighted the requirement for financial education programs focused on working women to enhance their financial literacy level and promote positive financial attitudes. Employers can also introduce workplace financial wellness programs that address both financial knowledge and psychological factors. Further, policymakers can formulate gender-specific financial policies and incentives to encourage long-term saving.

Future research could build on this study by using a larger sample size to enhance the generalizability and robustness of the results. Subsequent studies could also investigate demographic variables as potential moderators and examine other aspects of financial behavior. Moreover, comparing the saving behavior of salaried men and women could reveal important gender-based differences and enrich the understanding of financial decision-making.

http://dx.doi.org/10.21511/imfi.22(3).2025.31

AUTHOR CONTRIBUTIONS

Conceptualization: Kavita Berwal, Rohtash Bhall, Sonu Dalal, Haseen Ahmed.
Data curation: Kavita Berwal, Rohtash Bhall.
Formal analysis: Kavita Berwal.
Methodology: Rohtash Bhall, Haseen Ahmed.
Software: Kavita Berwal, Sonu Dalal.
Supervision: Rohtash Bhall, Haseen Ahmed.
Writing – original draft: Kavita Berwal, Rohtash Bhall, Sonu Dalal, Haseen Ahmed.
Writing – review & editing: Kavita Berwal, Rohtash Bhall, Sonu Dalal, Haseen Ahmed.

REFERENCES

1. Abay, K. A., Berhane, G., & Assefa, T. W. (2016, June). Locus of Control, Hyperbolic Preferences and Demand for Commitment and Savings: Evidence from Rural Ethiopia. Paper presented at the *UNU Wider Conference*. University of Copenhagen. Retrieved from https://www.wider.unu.edu/sites/default/files/Events/PDF/Slides/1_abay.pdf
2. Agustina, N. R., & Mardiana. (2020). The Effect of Financial Knowledge and Financial Attitude on Financial Management Behavior Mediated with Locus of Control. *Management and Economics Journal, 4*(3), 273-284. Retrieved from https://ejournal.uin-malang.ac.id/index.php/mec/article/view/5300
3. Ajzen, I. (2002). Perceived Behavioral Control, Self-Efficacy, Locus of Control, and the Theory of Planned Behavior. *Journal of Applied Social Psychology, 32*(4), 665-683. https://doi.org/10.1111/j.1559-1816.2002.tb00236.x
4. Al Kholilah, N., & Iramani, R. (2013). A study of financial management behavior in the people of Surabaya. *Journal of Business & Banking, 3*(1), 69-80. https://doi.org/10.14414/jbb.v3i1.255
5. Alodya, S. T. D., & Isnurhadi (2021). The effect of financial literacy, parental socialization and peers influence on saving behavior and the role of financial attitudes as a mediating variable in the millennial generation of workers in the city of Palembang. *Russian Journal of Agricultural and Socio-Economic Sciences, 118*(10), 89-97. https://doi.org/10.18551/rjoas.2021-10.11
6. Ameliawati, M., & Setiyani, R. (2018). The influence of financial attitude, financial socialization, and financial experience to financial management behavior with financial literacy as the mediation variable. *KnE Social Sciences,* 811-832. https://doi.org/10.18502/kss.v3i10.3174
7. Anastasya, A., & Pamungkas, A. S. (2023). Pengaruh Financial Literacy, Financial Attitude, dan Self Control terhadap Saving Behavior [The Influence of Financial Literacy, Financial Attitude, and Self-Control on Saving Behavior]. *Jurnal Manajerial Dan Kewirausahaan, 5*(2), 343-352. (In Indonesian). https://doi.org/10.24912/jmk.v5i2.23403
8. Ardyansyah, A. F., & Indrawati, N. K. (2024). The influence of financial knowledge on financial management behavior with locus of control and financial attitude as mediation variables: Study on Generation Z of pay-later E-Commerce users in Java. *International Journal of Research in Business and Social Science (2147-4478), 13*(4), 265-276. Retrieved from https://ideas.repec.org/a/rbs/ijbrss/v13y2024i4p265-276.html
9. Arkorful, H., & Hilton, S. K. (2022). Locus of control and entrepreneurial intention: a study in a developing economy. *Journal of Economic and Administrative Sciences, 38*(2), 333-344. https://doi.org/10.1108/JEAS-04-2020-0051
10. Asaff, R., Suryati, S., & Rahmayani, R. (2019). Pengaruh financial attitude dan Financial Knowledge terhadap financial management behavior. *Journal of Economic, Management and Accounting, 2*(2), 9-22. https://doi.org/10.35914/jemma.v2i2.243
11. Bapat, D. (2020). Antecedents to responsible financial management behavior among young adults: moderating role of financial risk tolerance. *International Journal of Bank Marketing, 38*(5), 1177-1194. https://doi.org/10.1108/IJBM-10-2019-0356
12. Bénabou, R., & Tirole, J. (2016). Mindful economics: The production, consumption, and value of beliefs. *Journal of Economic Perspectives, 30*(3), 141-164. https://doi.org/10.1257/jep.30.3.141
13. Bhargava, M., Sharma, A., Mohanty, B., & Lahiri, M. M. (2022). Moderating role of personality in relationship to financial attitude, financial behaviour, financial knowledge and financial capability. *International Journal of Sustainable Development and Planning, 17*(6), 1997-2006. https://doi.org/10.18280/ijsdp.170635
14. Braunstein, S., & Welch, C. (2002). Financial literacy: An overview of practice, research, and policy. *Federal Reserve Bulletin, 88,* 445-457. Retrieved from https://ideas.repec.org/a/fip/fedgrb/y2002inovp445-457nv.88no.11.html
15. Bucciol, A., & Trucchi, S. (2021). Locus of control and saving: The role of saving motives. *Journal of Economic Psychology, 86,*

102413. https://doi.org/10.1016/j.joep.2021.102413

16. Budiono, E. (2020). Analisis Financial Knowledge, Financial Attitude, Income, Locus of Control, Financial Management Behavior Masyarakat Kota Kediri [Analysis of Financial Knowledge, Financial Attitude, Income, Locus of Control, Financial Management Behavior of Kediri City Residents]. *Journal of Management Science, 8*(1), 284-295. (In Indonesian). Retrieved from https://ejournal.unesa.ac.id/index.php/jim/article/view/30848

17. Charista, B. T., Tendean, R. L., & Malelak, M. I. (2022). *The Influence of Financial Knowledge, Financial Attitude, and Financial Self Efficacy on Saving Behavior in Generation Z E-Commerce Users* (Doctoral dissertation). Petra Christian University. Retrieved from https://distribusi.unram.ac.id/index.php/distribusi/article/view/228/126

18. Chia, Y. K., Chai, M. T., Fong, S. N., Lew, W. C., & Tan, C. T. (2011). *Determinants of saving behaviour among the university students in Malaysia* (Doctoral dissertation). UTAR. Retrieved from eprints.utar.edu.my/607/1/AC-2011-0907445.pdf

19. Chujan, W., Ngoc, N. L. B., & Faizi, A. S. (2022). Locus of Control on Financial Behavior and Financial Risk Attitude. *Annals of Economics & Finance, 23*(2). Retrieved from https://ideas.repec.org/a/cuf/journl/y2022v23i2chujanngocfaizi.html

20. Cobb-Clark, D. A., Kassenboehmer, S. C., & Sinning, M. G. (2016). Locus of control and savings. *Journal of Banking & Finance, 73,* 113-130. https://doi.org/10.1016/j.jbankfin.2016.06.013

21. Dwiastanti, A. (2017). Analysis of financial knowledge and financial attitude on locus of control and financial management behavior. *Management and Business Review, 1*(1), 1-8. Retrieved from https://doi.org/10.21067/mbr.v1i1.2043

22. Falk, R. F., & Miller, N. B. (1992). *A primer for soft modeling*. University of Akron Press.

23. Gahagho, Youla Diknasita, Tri Oldy Rotinsulu, & Dennij Mandeij (2021). The Influence of Financial Literation on Financial Attitudes and Revenue Resources on Financial Management Behavior of Students of the Faculty of Economics and Business UNSRAT With Intention as Intervening Variables. *Jurnal EMBA 9*(1), 543-555. https://doi.org/10.35794/emba.v9i1.32337

24. Gautama, B. P., & Deyola, Y. (2014). The Influence of Financial Knowledge and Financial Attitudes on Saving Decisions on Savings Products in Banking. *Journal of Finance and Business, 12*(2), 114-141. Retrieved from https://123dok.com/document/q517e9wy-pengaruh-pengetahuan-keuangan-keuangan-terhadap-keputusan-perbankan-pamungkas.html

25. Hair Jr, J. F. (2006). Successful strategies for teaching multivariate statistics. In *Proceedings of the 7th International Conference on* (pp. 1-5). Retrieved from stat.auckland.ac.nz/~iase/publications/17/3E2_HAIR.pdf

26. Hair, J. F., Risher, J. J., Sarstedt, M., & Ringle, C. M. (2019). When to use and how to report the results of PLS-SEM. *European Business Review, 31*(1), 2-24. Retrieved from https://doi.org/10.1108/EBR-11-2018-0203

27. Hair, J. F., Sharma, P. N., Sarstedt, M., Ringle, C. M., & Liengaard, B. D. (2024). The shortcomings of equal weights estimation and the composite equivalence index in PLS-SEM. *European Journal of Marketing, 58*(13), 30-55. https://doi.org/10.1108/EJM-04-2023-0307

28. Hair, Jr, J. F., Sarstedt, M., Matthews, L. M., & Ringle, C. M. (2016). Identifying and treating unobserved heterogeneity with FIMIX-PLS: part I – method. *European Business Review, 28*(1), 63-76. https://doi.org/10.1108/EBR-09-2015-0094

29. Haudi. (2023). The role of financial literacy, financial attitudes, and family financial education on personal financial management and locus of control of university students. *International Journal of Social and Management Studies, 4*(2), 107-116. Retrieved from https://mail.ijosmas.org/index.php/ijosmas/article/view/289

30. Henager, R., & Mauldin, T. (2015). Financial literacy: The relationship to saving behavior in low-to moderate-income households. *Family and Consumer Sciences Research Journal, 44*(1), 73-87. https://doi.org/10.1111/fcsr.12120

31. Henseler, J., Ringle, C. M., & Sarstedt, M. (2015). A new criterion for assessing discriminant validity in variance-based structural equation modeling. *Journal of the Academy of Marketing Science, 43,* 115-135. https://psycnet.apa.org/doi/10.1007/s11747-014-0403-8

32. Hilgert, M. A., Hogarth, J. M., & Beverly, S. G. (2003). Household financial management: The connection between knowledge and behavior. *Federal Reserve Bulletin, 89,* 309-322. Retrieved from https://heinonline.org/HOL/LandingPage?handle=hein.journals/fedred89&div=90&id=&page=

33. Kesavayuth, D., Ko, K. M., & Zikos, V. (2018). Locus of control and financial risk attitudes. *Economic Modelling, 72*(1), 122-131. https://doi.org/10.1016/j.econmod.2018.01.010

34. Kimball, M. S., & Shumway, T. (2009). Fatalism, Locus of Control, and Retirement Saving. *University of Michigan, Mimeo.* Retrieved from conference.nber.org/confer/2009/SI2009/SAV/Kimball.pdf

35. Lusardi, A. (2019). Financial literacy and the need for financial education: evidence and implications. *Swiss Journal of Economics and Statistics, 155*(1), 1-8. https://doi.org/10.1186/s41937-019-0027-5

36. Lusardi, A., & Mitchell, O. S. (2014). The economic importance of financial literacy: Theory and evidence. *Journal of Economic Literature, 52*(1), 5-44. http://doi.org/10.1257/jel.52.1.5

37. Lusardi, A., & Mitchell, O. S. (2017). How ordinary consum-

http://dx.doi.org/10.21511/imfi.22(3).2025.31

ers make complex economic decisions: Financial literacy and retirement readiness. *Quarterly Journal of Finance, 7*(03), 1750008. https://doi.org/10.1142/S2010139217500082

38. Lutfi, A. (2022). Factors influencing the continuance intention to use accounting information system in Jordanian SMEs from the perspectives of UTAUT: Top management support and self-efficacy as predictor factors. *Economies, 10*(4), 75. https://doi.org/10.3390/economies10040075

39. Magendans, J. (2014). *The cost of self-protective measures: psychological predictors of saving money for a financial buffer.* University of Twente. Retrieved from http://purl.utwente.nl/essays/65722

40. Mahdzan N. S., & Tabiani, S. (2013). The Impact of Financial Literacy on Individual Saving: An Exploratory Study in the Malaysian Context. *Transformations in Business & Economics, 12*(1(28)), 41-55. Retrieved from https://www.transformations.knf.vu.lt/28/se28.pdf

41. Maheshwari, H., Samantaray, A. K., Panigrahi, R. R., & Jena, L. K. (2025). Financial literacy in predicting investment decisions: do attitude and overconfidence influence? *International Journal of Social Economics, 52*(2), 220-235. Retrieved from https://ideas.repec.org/a/eme/ijsepp/ijse-05-2023-0370.html

42. Manihuruk, R. B. R., & Lubis, T. A. (2021). Analysis of the Influence of Financial Knowledge, Financial Attitude, Lifestyle on Financial Management Behavior with Locus of Control as a Moderating Variable at the Regional Drinking Water Company (PDAM) of Jambi City. *Journal of Applied Management and Finance (Mankeu), 11*(01), 38-50. https://doi.org/10.22437/jmk.v11i01.17293

43. Perry, V. G., & Morris, M. D. (2005). Who is in control? The role of self-perception, knowledge, and income in explaining consumer financial behavior. *Journal of Consumer* Affairs, *39*(2), 299-313. Retrieved from https://psycnet.apa.org/doi/10.1111/j.1745-6606.2005.00016.x

44. Potrich, A. C. G., Vieira, K. M., & Kirch, G. (2018). How well do women do when it comes to financial literacy? Proposition of an indicator and analysis of gender differences. *Journal of Behavioral and Experimental Finance, 17,* 28-41. https://doi.org/10.1016/j.jbef.2017.12.005

45. Pradiningtyas, T. E., & Lukiastuti, F. (2019). The influence of financial knowledge and financial attitudes on the locus of control and financial management behavior of economics students. *Journal of Minds: Idea Management and Inspiration, 6*(1), 96-112. https://doi.org/10.24252/minds.v6i1.9274

46. Prayuda, R. Z., & Purwanto, A. (2024). The Role of Locus of Control, Financial Knowledge and Income on Financial Management Behavior: PLS-SEM Analysis. *PROFESOR: Professional Education Studies and Operations Research, 1*(02), 1-5. https://doi.org/10.7777/t758dc49

47. Sabri, M. F., & MacDonald, M. (2010). Savings behavior and financial problems among college students: The role of financial literacy in Malaysia. *Cross-Cultural Communication, 6*(3), 103-110. http://dx.doi.org/10.3968/j.ccc.1923670020100603.009

48. Sevim, N., Temizel, F., & Sayılır, Ö. (2012). The effects of financial literacy on the borrowing behaviour of Turkish financial consumers. *International Journal of Consumer Studies, 36*(5), 573-579. https://doi.org/10.1111/j.1470-6431.2012.01123.x

49. Strömbäck, C., Lind, T., Skagerlund, K., Västfjäll, D., & Tinghög, G. (2017). Does self-control predict financial behavior and financial well-being? *Journal of Behavioral and Experimental Finance, 14,* 30-38. Retrieved from https://ideas.repec.org/a/eee/beexfi/v14y2017icp30-38.html

50. Tagini, S., Brugnera, A., Ferrucci, R., Mazzocco, K., Pievani, L., Priori, A., & Poletti, B. (2021). Attachment, personality and locus of control: Psychological determinants of risk perception and preventive behaviors for COVID-19. *Frontiers in Psychology, 12,* 634012. Retrieved from https://pmc.ncbi.nlm.nih.gov/articles/PMC8299752/

51. Van Rooij, M., Lusardi, A., & Alessie, R. (2012). Financial literacy, retirement planning and household wealth. *The Economic Journal, 122,* 449-478. https://doi.org/10.1111/j.1468-0297.2012.02501.x

52. van Schie, R. J., Donkers, B., & Dellaert, B. G. (2012). Savings adequacy uncertainty: Driver or obstacle to increased pension contributions? *Journal of Economic Psychology, 33*(4), 882-896. https://doi.org/10.1016/j.joep.2012.04.004

53. Vinzi, V. E., Trinchera, L., & Amato, S. (2010). PLS path modeling: from foundations to recent developments and open issues for model assessment and improvement. *Handbook of Partial Least Squares: Concepts, Methods and Applications,* 47-82. Retrieved from https://link.springer.com/chapter/10.1007/978-3-540-32827-8_3

54. Widjaja, I., Arifin, A. Z., & Setini, M. (2020). The effects of financial literacy and subjective norms on saving behavior. *Management Science Letters, 10*(15), 3635-3642. http://dx.doi.org/10.5267/j.msl.2020.6.030